Centre No.						Paper Reference							Surname	Initial(s)
Candidate No.						6	6	6	4	/	0	1	Signature	

Paper Reference(s)

6664/01

Edexcel GCE

Core Mathematics C2

Advanced Subsidiary

Thursday 26 May 2011 – Morning

Time: 1 hour 30 minutes

Examiner's use only

Team Leader's use only

Question Number	Leave Blank
1	
2	
3	
4	
5	
6	
7	
8	
9	
Total	

Materials required for examination
Mathematical Formulae (Pink)

Items included with question papers
Nil

Candidates may use any calculator allowed by the regulations of the Joint Council for Qualifications. Calculators must not have the facility for symbolic algebra manipulation or symbolic differentiation/integration, or have retrievable mathematical formulae stored in them.

Instructions to Candidates

In the boxes above, write your centre number, candidate number, your surname, initials and signature.
Check that you have the correct question paper.
Answer ALL the questions.
You must write your answer for each question in the space following the question.
When a calculator is used, the answer should be given to an appropriate degree of accuracy.

Information for Candidates

A booklet 'Mathematical Formulae and Statistical Tables' is provided.
Full marks may be obtained for answers to ALL questions.
The marks for individual questions and the parts of questions are shown in round brackets: e.g. **(2)**.
There are 9 questions in this question paper. The total mark for this paper is 75.
There are 32 pages in this question paper. Any blank pages are indicated.

Advice to Candidates

You must ensure that your answers to parts of questions are clearly labelled.
You should show sufficient working to make your methods clear to the Examiner.
Answers without working may not gain full credit.

This publication may be reproduced only in accordance with Edexcel Limited copyright policy.
©2011 Edexcel Limited.

Printer's Log. No.
P38158A
W850/R6664/57570 5/5/3/3

P 3 8 1 5 8 A 0 1 3 2

Turn over

edexcel
advancing learning, changing lives

https://xtremepape.rs/

Leave blank

1. $$f(x) = 2x^3 - 7x^2 - 5x + 4$$

(a) Find the remainder when $f(x)$ is divided by $(x-1)$.

(2)

(b) Use the factor theorem to show that $(x+1)$ is a factor of $f(x)$.

(2)

(c) Factorise $f(x)$ completely.

(4)

P 3 8 1 5 8 A 0 2 3 2

https://xtremepape.rs/

Leave blank

Question 1 continued

Q1

(Total 8 marks)

https://xtremepape.rs/

Leave blank

2. (a) Find the first 3 terms, in ascending powers of x, of the binomial expansion of

$$(3+bx)^5$$

where b is a non-zero constant. Give each term in its simplest form.

(4)

Given that, in this expansion, the coefficient of x^2 is twice the coefficient of x,

(b) find the value of b.

(2)

https://xtremepape.rs/

Leave blank

Question 2 continued

(Total 6 marks)

Q2

https://xtremepape.rs/

Leave blank

3. Find, giving your answer to 3 significant figures where appropriate, the value of x for which

(a) $5^x = 10$,

(2)

(b) $\log_3(x-2) = -1$.

(2)

https://xtremepape.rs/

Leave blank

Question 3 continued

Q3

(Total 4 marks)

https://xtremepape.rs/

Leave blank

4. The circle C has equation

$$x^2 + y^2 + 4x - 2y - 11 = 0$$

Find

(a) the coordinates of the centre of C,

(2)

(b) the radius of C,

(2)

(c) the coordinates of the points where C crosses the y-axis, giving your answers as simplified surds.

(4)

P 3 8 1 5 8 A 0 8 3 2

https://xtremepape.rs/

Leave blank

Question 4 continued

https://xtremepape.rs/

Leave blank

Question 4 continued

https://xtremepape.rs/

Leave blank

Question 4 continued

Q4

(Total 8 marks)

https://xtremepape.rs/

Leave blank

5.

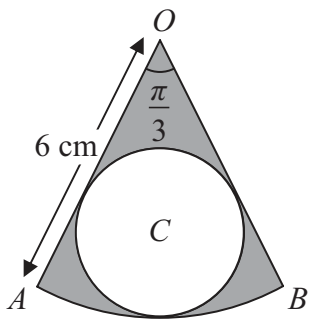

Figure 1

The shape shown in Figure 1 is a pattern for a pendant. It consists of a sector OAB of a circle centre O, of radius 6 cm, and angle $AOB = \frac{\pi}{3}$. The circle C, inside the sector, touches the two straight edges, OA and OB, and the arc AB as shown.

Find

(a) the area of the sector OAB,

(2)

(b) the radius of the circle C.

(3)

The region outside the circle C and inside the sector OAB is shown shaded in Figure 1.

(c) Find the area of the shaded region.

(2)

https://xtremepape.rs/

Leave blank

Question 5 continued

https://xtremepape.rs/

Leave blank

Question 5 continued

https://xtremepape.rs/

Leave blank

Question 5 continued

(Total 7 marks)

Q5

https://xtremepape.rs/

Leave blank

6. The second and third terms of a geometric series are 192 and 144 respectively.

For this series, find

(a) the common ratio,

(2)

(b) the first term,

(2)

(c) the sum to infinity,

(2)

(d) the smallest value of n for which the sum of the first n terms of the series exceeds 1000.

(4)

https://xtremepape.rs/

Leave blank

Question 6 continued

https://xtremepape.rs/

Leave blank

Question 6 continued

https://xtremepape.rs/

Leave blank

Question 6 continued

Q6

(Total 10 marks)

https://xtremepape.rs/

Leave blank

7. (a) Solve for $0 \leqslant x < 360°$, giving your answers in degrees to 1 decimal place,

$$3\sin(x+45°) = 2$$

(4)

(b) Find, for $0 \leqslant x < 2\pi$, all the solutions of

$$2\sin^2 x + 2 = 7\cos x$$

giving your answers in radians.

You must show clearly how you obtained your answers.

(6)

https://xtremepape.rs/

Leave blank

Question 7 continued

https://xtremepape.rs/

Leave blank

Question 7 continued

https://xtremepape.rs/

Leave blank

Question 7 continued

(Total 10 marks)

Q7

https://xtremepape.rs/

Leave blank

8.

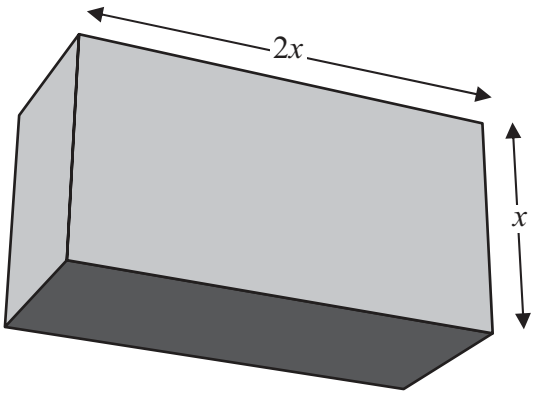

Figure 2

A cuboid has a rectangular cross-section where the length of the rectangle is equal to twice its width, x cm, as shown in Figure 2.
The volume of the cuboid is 81 cubic centimetres.

(a) Show that the total length, L cm, of the twelve edges of the cuboid is given by

$$L = 12x + \frac{162}{x^2}$$

(3)

(b) Use calculus to find the minimum value of L.

(6)

(c) Justify, by further differentiation, that the value of L that you have found is a minimum.

(2)

https://xtremepape.rs/

Leave blank

Question 8 continued

https://xtremepape.rs/

Leave blank

Question 8 continued

https://xtremepape.rs/

Leave blank

Question 8 continued

Q8

(Total 11 marks)

https://xtremepape.rs/

Leave blank

9.

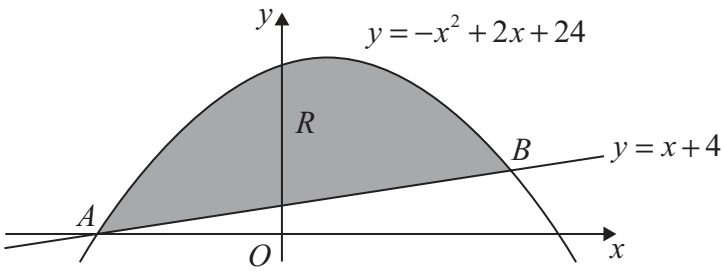

Figure 3

The straight line with equation $y = x + 4$ cuts the curve with equation $y = -x^2 + 2x + 24$ at the points A and B, as shown in Figure 3.

(a) Use algebra to find the coordinates of the points A and B.

(4)

The finite region R is bounded by the straight line and the curve and is shown shaded in Figure 3.

(b) Use calculus to find the exact area of R.

(7)

P 3 8 1 5 8 A 0 2 8 3 2

https://xtremepape.rs/

Leave blank

Question 9 continued

https://xtremepape.rs/

Leave blank

Question 9 continued

https://xtremepape.rs/

Leave blank

Question 9 continued

https://xtremepape.rs/

Leave blank

Question 9 continued

Q9

(Total 11 marks)

TOTAL FOR PAPER: 75 MARKS

END

https://xtremepape.rs/